PROJECT NO:
SGNYD1610038

REV	DESCRIPTION	DATE	APPROVED
S0	CREATED DRAWING	2016/11/02	SXY
S1	Update drawing	2022/09/29	CYF

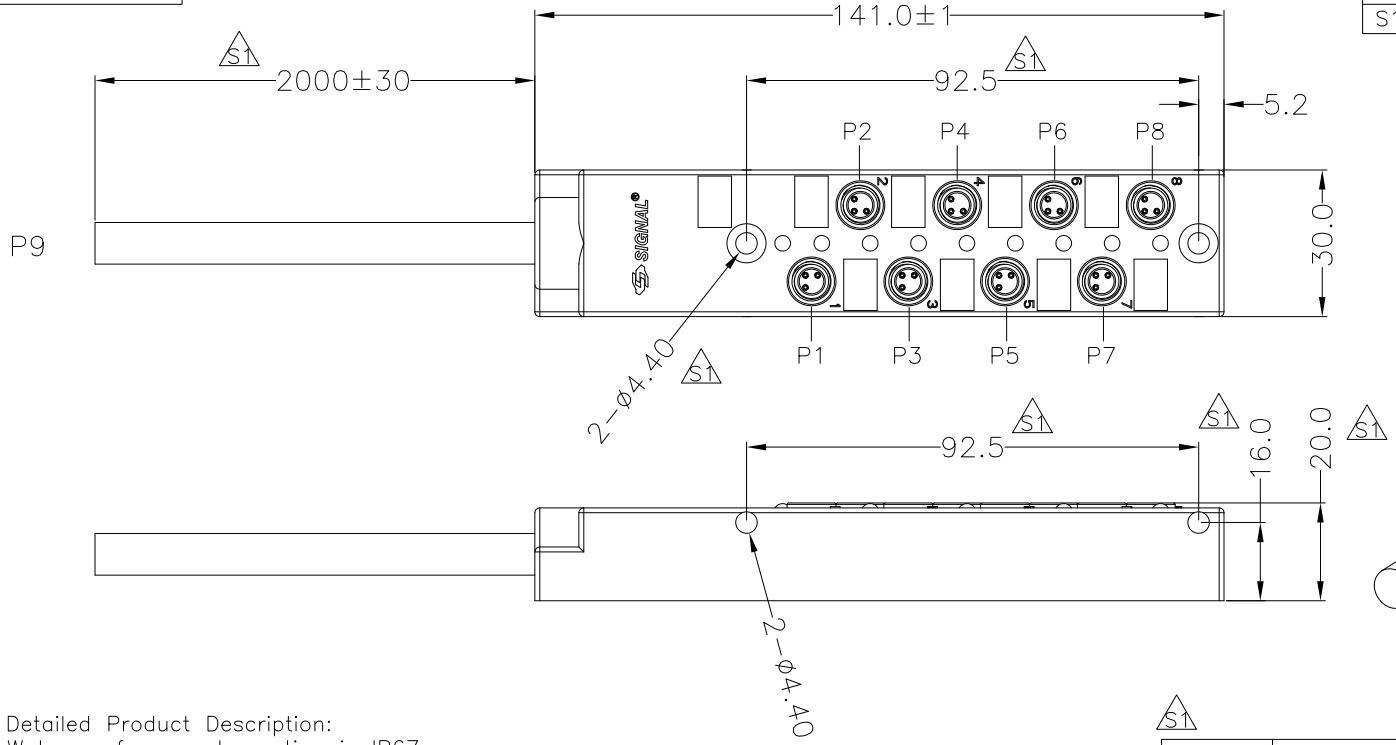

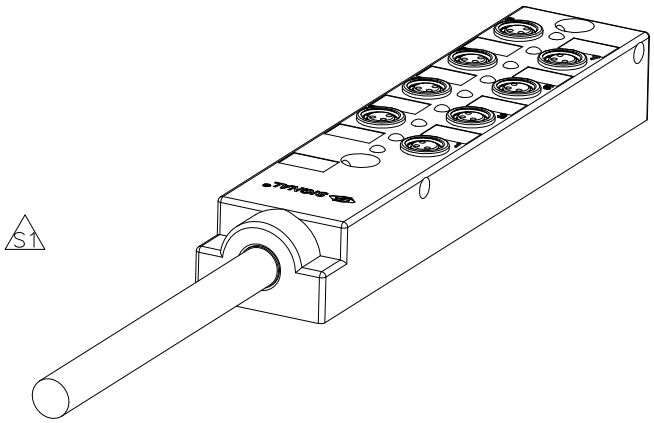

Detailed Product Description:
Waterproof connector rating is IP67
They can not be used permanently under water

Connector Electrical Character:
Rating voltage: 24V DC
Max. operating voltage Umax: 30V DC
Current carrying capacity per I/O signal: 2A
Total rated current: 6A
Contact resistance of connector ≤10mΩ
Mechanical characteristics: mating/cycle >100cycle
Operating temperature: −25°C ~ +85°C

ALL MATERIALS ARE RoHS COMPLIANT

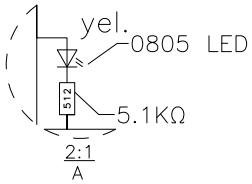

S1

P9	OPEN									
COLOR	BROWN	BLUE	WHITE	GREEN	YELLOW	GREY	PINK	RED	BLACK	VIOLET
PCB	VOC	GND	CN1	CN2	CN3	CN4	CN5	CN6	CN7	CN8
			P1	P2	P3	P4	P5	P6	P7	P8

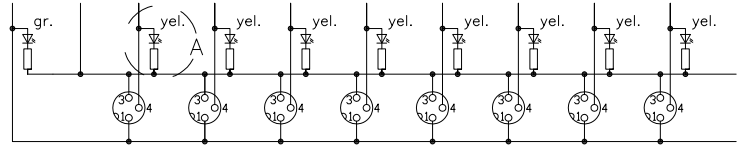

ITEM	PART NO.	SPECIFICATION	Q'TY	UNIT
⑥	N/A	22AWG*8C+18AWG*2C JACKET BLACK PUR CABLE	1	PCS
⑤	GL00002	BLACK GLUE A/B (ETHOXYLINE RESIN)	30	g
④	LE00006	TRANSPARENT LIGHT GUIDE COLUMN	9	PCS
③	PC00073	M8 3PIN PCB CIRCUIT BOARD BOX (PNP)	1	PCS
②	N/A	M8 A CODING 3PIN FEMALE CONNECTOR DIP	8	PCS
①	N/A	ALUMINUM ALLOY SHELL OF JUNCTION BOX(8*M8, COLOR:BLACK)	1	PCS

SIGNAL®
Shenzhen Signal Electronics co.,Ltd

DRAWN BY	DATE
CHECKED BY	DATE
CHECKED BY	DATE
APPROVED BY	DATE

THE INFORMATION CONTAINED IN THIS DRAWING IS THE SOLE PROPERTY OF SIGNAL COMPANY. ANY REPRODUCTION IN PART OR WHOLE WITHOUT THE WRITTEN PERMISSION OF SIGNAL COMPANY ISPROHIBITED.

TITLE: SENSOR/ACTUATOR BOX 8*M8 FEMALE, PUR CABLE(PNP)

SGN NO	920103-08-003	REV.
DWG NO	SGNYD2209113-L1118	S1
CUSTOMER		

TOLERANCES ARE:

DECIMALES	ANGLES
.x ±0.50	x.° ±2.0°
.xx ±0.20	.x° ±1.0°

THIRD ANGLE PROJECTION

SIZE: A4 UNITS: mm
SCALE: SHEET:

Web: http://www.signal-connector.com/
E-mail:saudi@sz-signal.com